ARTWORK PROOF

193 Lorne Ave. W Stratford, ON. N5A 6S4
artwork@tmpintl.com 877-322-4423

PRODUCT	Template: Tote Bags (Generic)
JOB NAME	0000000000
PROOF DATE	JAN 01 2024
QUANTITY	0 unit(s)

PLEASE ENSURE THIS PROOF REPRESENTS EXACTLY WHAT YOU ORDERED BEFORE SIGNING OFF.
WE ARE ONLY RESPONSIBLE FOR THE PRINTING OF THE PRODUCTS AS SHOWN IN THIS PROOF.

FRONT

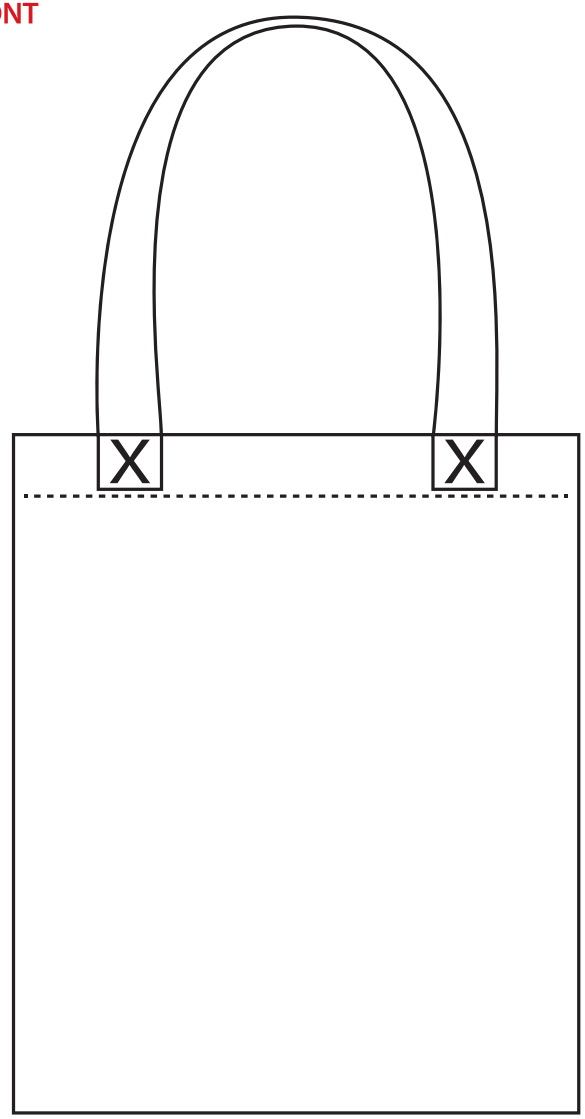

BACK

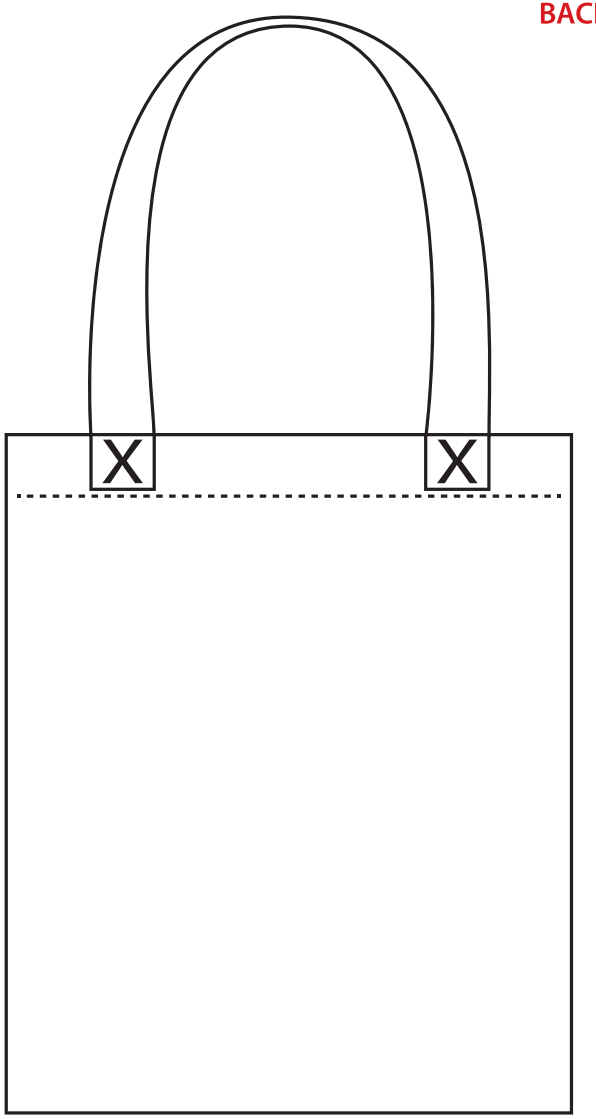

COLOUR PALETTE

☐ PMS ____	☐ PMS ____
☐ PMS ____	☐ PMS ____
☐ PMS ____	☐ PMS ____

☐ Print as is, no colour matching available.
TMP is NOT responsible for colour descrepancies

NOTES

☐ Changes required ☐ Print quality artwork required ☐ Text is not outlined

* All text/fonts must be converted to outlines.
* Do not embed images. Please supply them. Resolution must be at least 300 dpi.
* All files are printed in CMYK. Colour matching cannot be guaranteed unless specific PMS colours are provided.
* We are not responsible for misprints of any kind once proof has been approved. Please check all spelling, grammar, and placement of art.
* Orders will be scheduled for production only when proofs have been approved and returned to us with required signature.

Please sign and email back to sender

APPROVED BY

_____
Please print name

_____
Signature

_____
Date