BR-A 90X100CM

Front

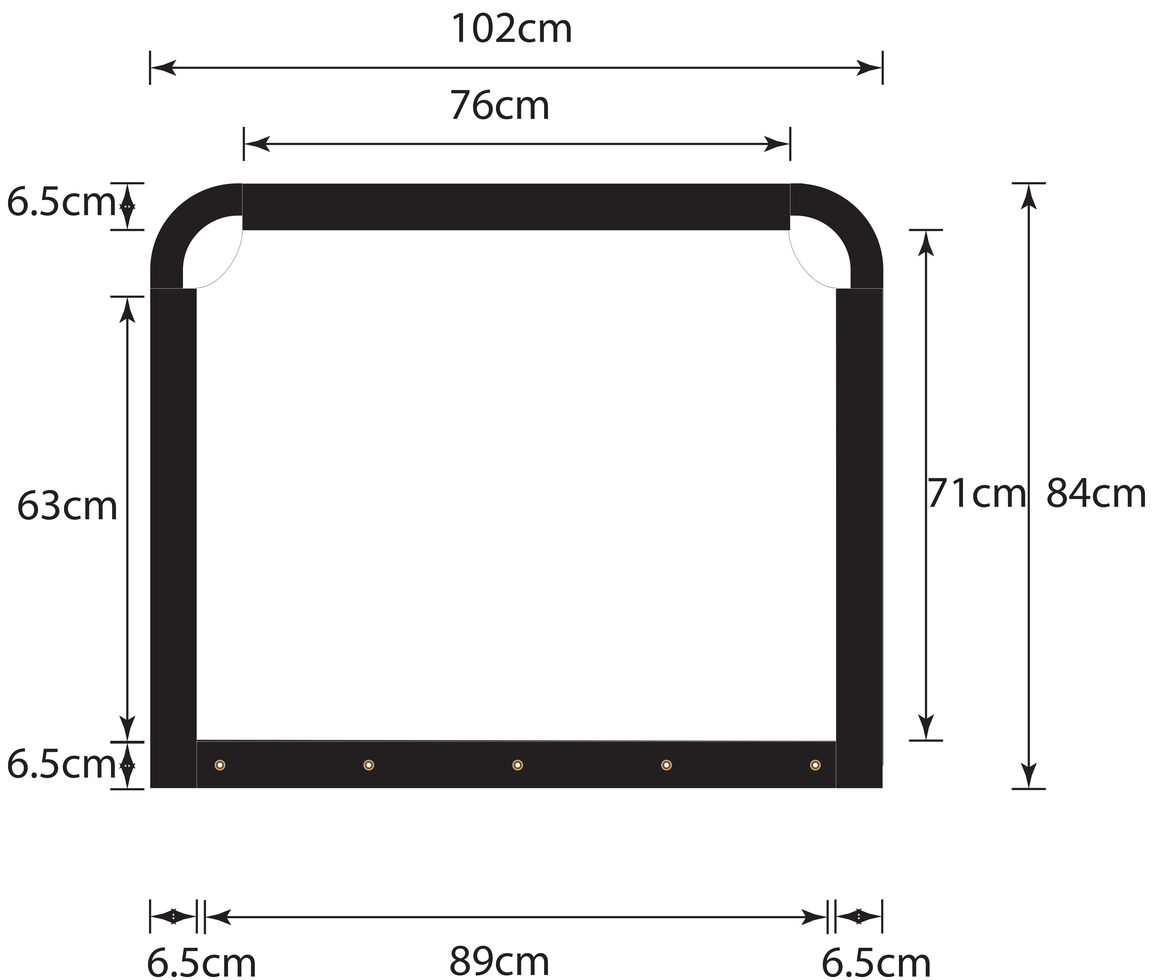
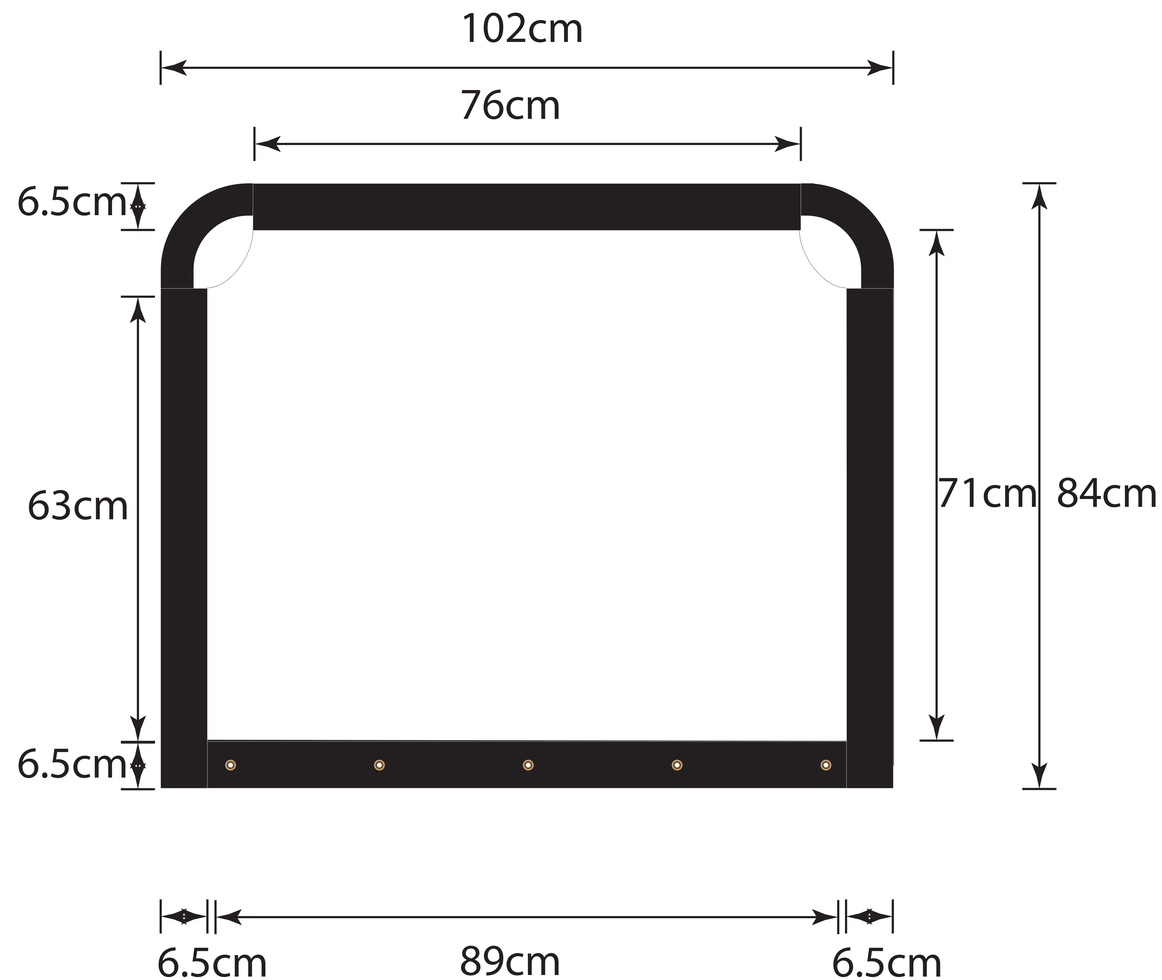
Back